Project PRISM Film Scanner

Version: 0 Proof of Concept
Date: Mar 7, 2026 Author: mr258876
Source: https://github.com/mr258876/PRISM Film Scanner

IMPORTANT NOTICE:
This project is in early development. Schematic may change without notice.
Power design & layout is not yet optmized. Noise may affect image quality dramatically.

Copyright © 2026 mr258876
This source describes Open Hardware and is licensed under CERN-OHL-W-2.0.
You may modify and redistribute this source under the terms of the CERN Open Hardware Licence, weakly reciprocal, version 2.0 or any later version.
This source is provided WITHOUT ANY EXPRESS OR IMPLIED WARRANTY, INCLUDING OF MERCHANTABILITY, SATISFACTORY QUALITY AND FITNESS FOR A PARTICULAR PURPOSE. See https://cern-ohl.web.cern.ch for details.
Source location: https://github.com/mr258876/PRISM Film Scanner

Page 1/4: Image sensor / AD converter

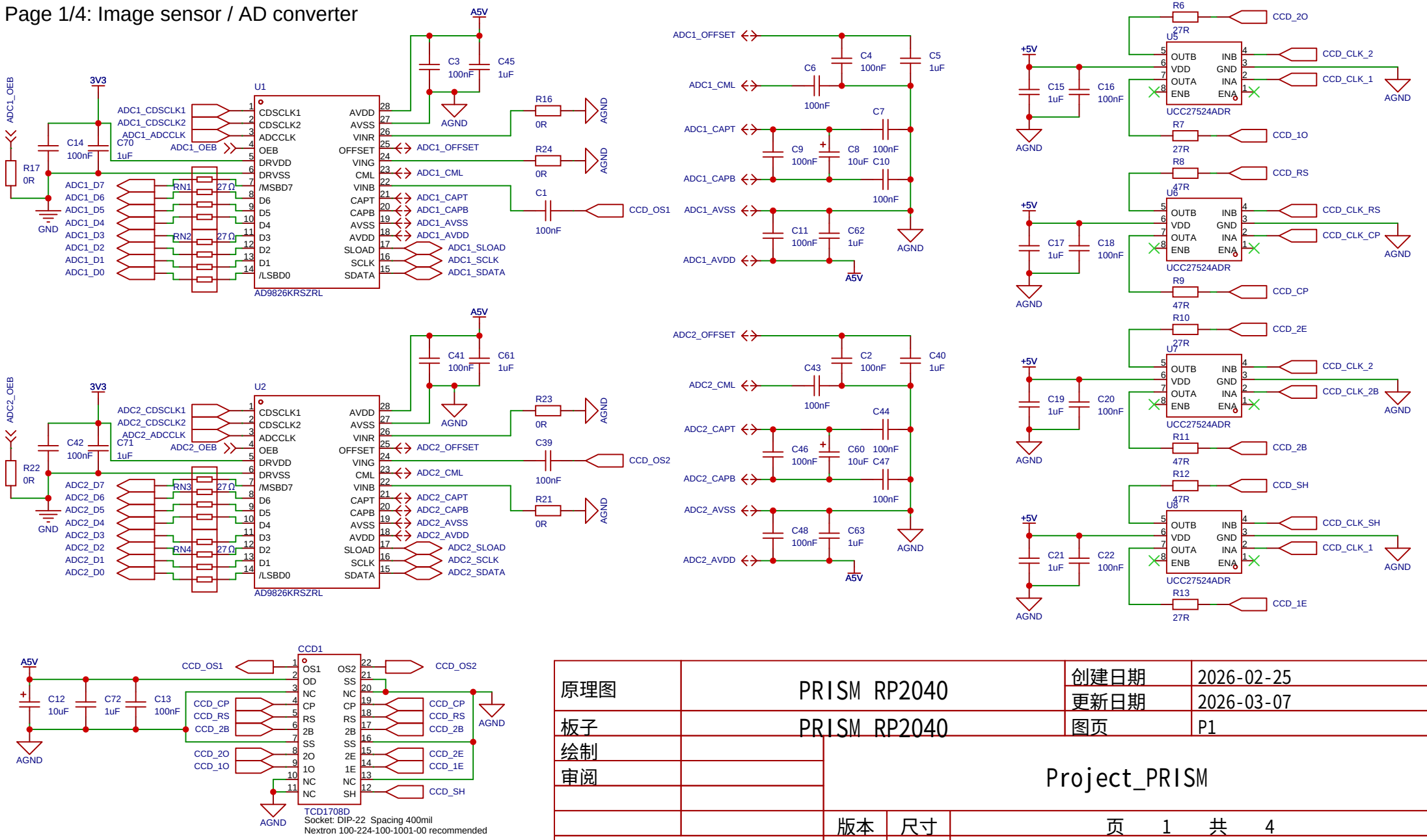

原理图	PRISM RP2040	创建日期	2026-02-25
		更新日期	2026-03-07
板子	PRISM RP2040	图页	P1
绘制			
审阅			
		Project_PRISM	
	版本	尺寸	页 1 共 4
嘉立创EDA	0	A4	

Project PRISM Film Scanner

Version: 0 Proof of Concept
Date: Mar 7, 2026 Author: mr258876
Source: https://github.com/mr258876/PRISM Film Scanner

IMPORTANT NOTICE:
This project is in early development. Schematic may change without notice.
Power design & layout is not yet optmized. Noise may affect image quality dramatically.

Copyright © 2026 mr258876
This source describes Open Hardware and is licensed under CERN-OHL-W-2.0.
You may modify and redistribute this source under the terms of the CERN Open Hardware Licence, weakly reciprocal, version 2.0 or any later version.
This source is provided WITHOUT ANY EXPRESS OR IMPLIED WARRANTY, INCLUDING OF MERCHANTABILITY, SATISFACTORY QUALITY AND FITNESS FOR A PARTICULAR PURPOSE. See https://cern-ohl.web.cern.ch for details.
Source location: https://github.com/mr258876/PRISM Film Scanner

Page 2/4: Timing generator

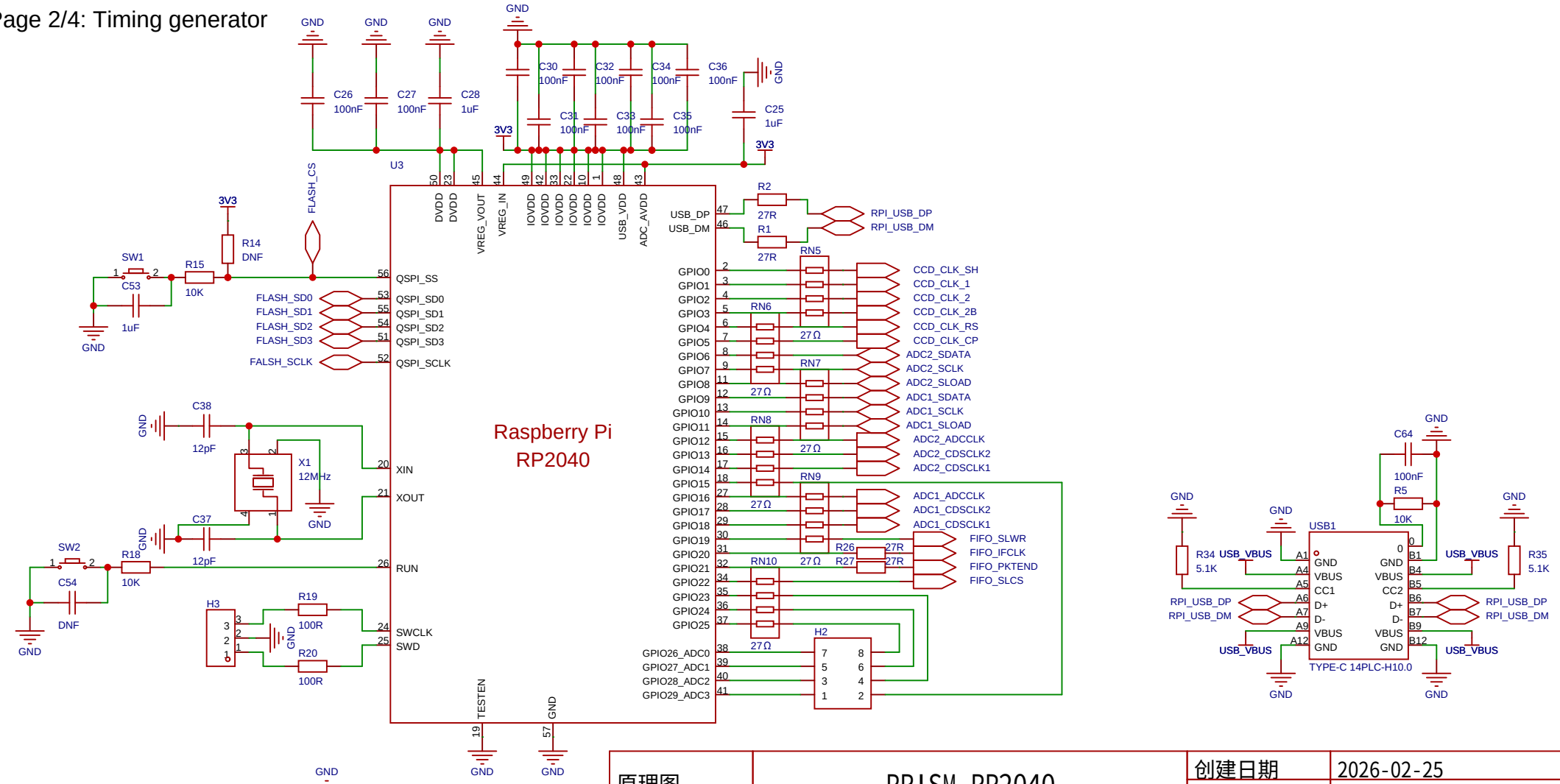

原理图	PRISM RP2040	创建日期	2026-02-25
		更新日期	2026-03-07
板子	PRISM RP2040	图页	P2
绘制			
审阅			
		Project_PRISM	
		版本	尺寸
		0	A4
		页 2 共 4	

嘉立创EDA

Project PRISM Film Scanner

Version: 0 Proof of Concept
Date: Mar 7, 2026 Author: mr258876
Source: https://github.com/mr258876/PRISM Film Scanner

IMPORTANT NOTICE:
This project is in early development. Schematic may change without notice.
Power design & layout is not yet optmized. Noise may affect image quality dramatically.

Copyright © 2026 mr258876
This source describes Open Hardware and is licensed under CERN-OHL-W-2.0.
You may modify and redistribute this source under the terms of the CERN Open Hardware Licence, weakly reciprocal, version 2.0 or any later version.
This source is provided WITHOUT ANY EXPRESS OR IMPLIED WARRANTY, INCLUDING OF MERCHANTABILITY, SATISFACTORY QUALITY AND FITNESS FOR A PARTICULAR PURPOSE. See https://cern-ohl.web.cern.ch for details.
Source location: https://github.com/mr258876/PRISM Film Scanner

Page 3/4: USB output buffer

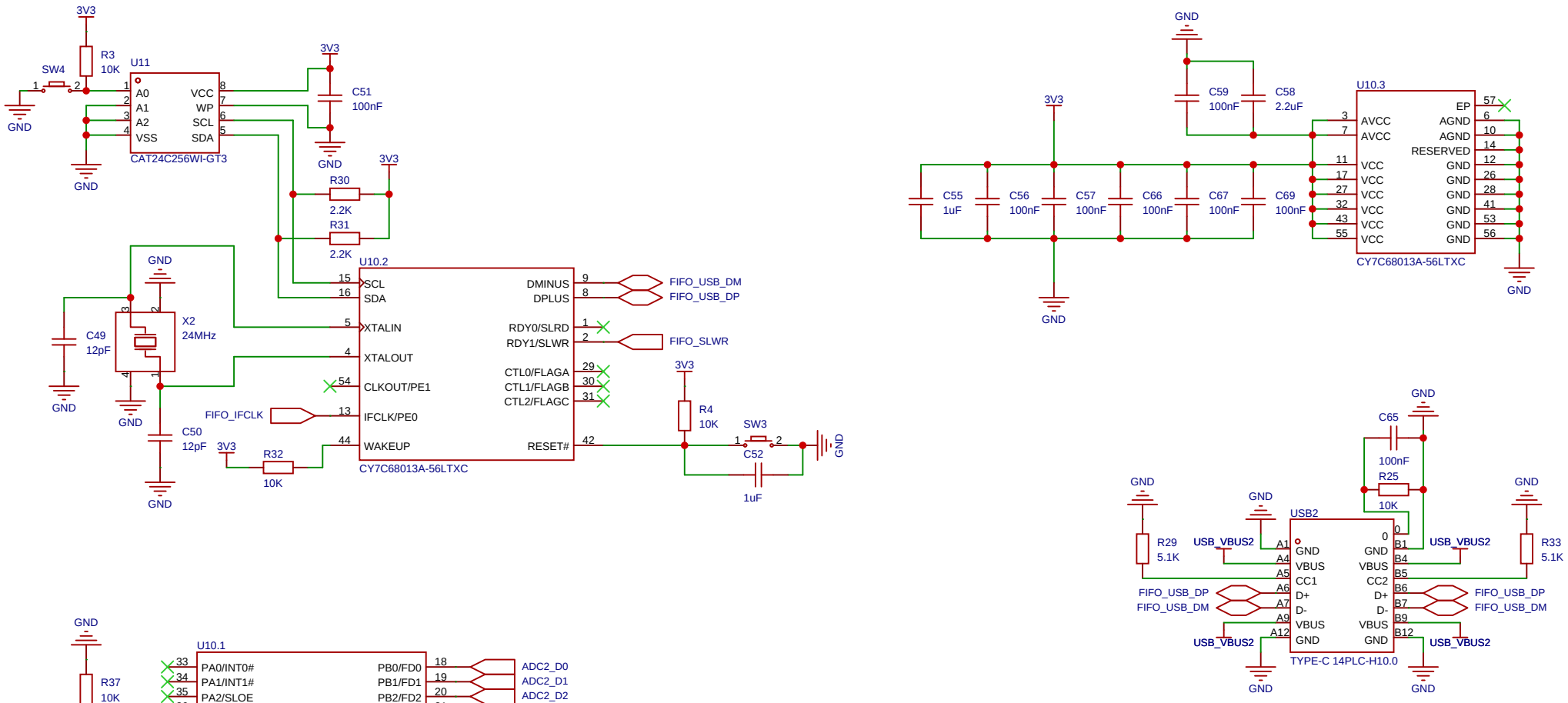

原理图	PRISM RP2040	创建日期	2026-02-11
		更新日期	2026-03-07
板子	PRISM RP2040	图页	P3
绘制		Project_PRISM	
审阅			
		版本	尺寸
		0	A4
		页 3 共 4	

嘉立创EDA

Project PRISM Film Scanner

Version: 0 Proof of Concept
Date: Mar 7, 2026 Author: mr258876
Source: https://github.com/mr258876/PRISM Film Scanner

IMPORTANT NOTICE:
This project is in early development. Schematic may change without notice.
Power design & layout is not yet optmized. Noise may affect image quality dramatically.

Copyright © 2026 mr258876
This source describes Open Hardware and is licensed under CERN-OHL-W-2.0.
You may modify and redistribute this source under the terms of the CERN Open Hardware Licence, weakly reciprocal, version 2.0 or any later version.
This source is provided WITHOUT ANY EXPRESS OR IMPLIED WARRANTY, INCLUDING OF MERCHANTABILITY, SATISFACTORY QUALITY AND FITNESS FOR A PARTICULAR PURPOSE. See https://cern-ohl.web.cern.ch for details.
Source location: https://github.com/mr258876/PRISM Film Scanner

Page 4/4: Power

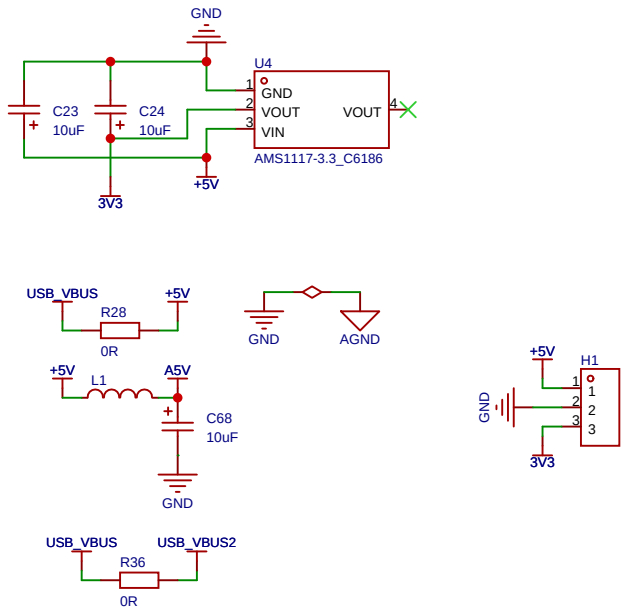

原理图	PRISM RP2040	创建日期	2026-02-01
		更新日期	2026-03-07
板子	PRISM RP2040	图页	P4
绘制		Project_PRISM	
审阅			
		版本	尺寸	页 4 共 4
嘉立创EDA		0	A4	